QRG

FLUKE

287/289
True-rms Digital Multimeters

⚠ 📖 www.fluke.com

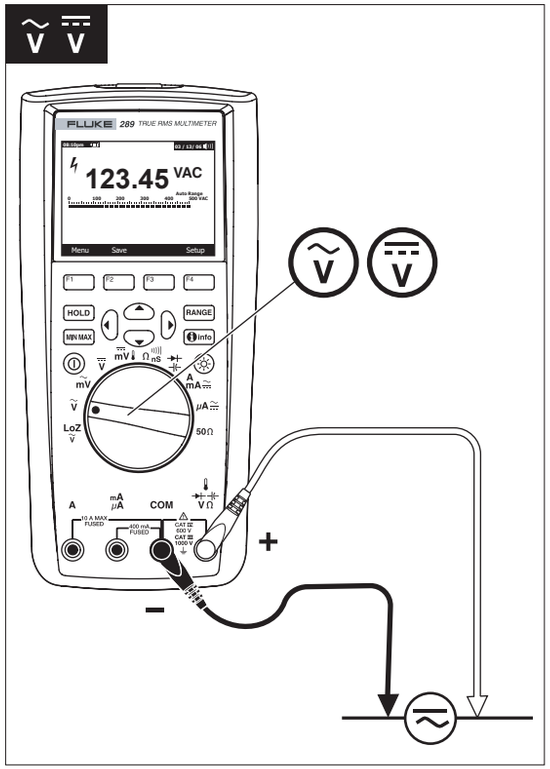

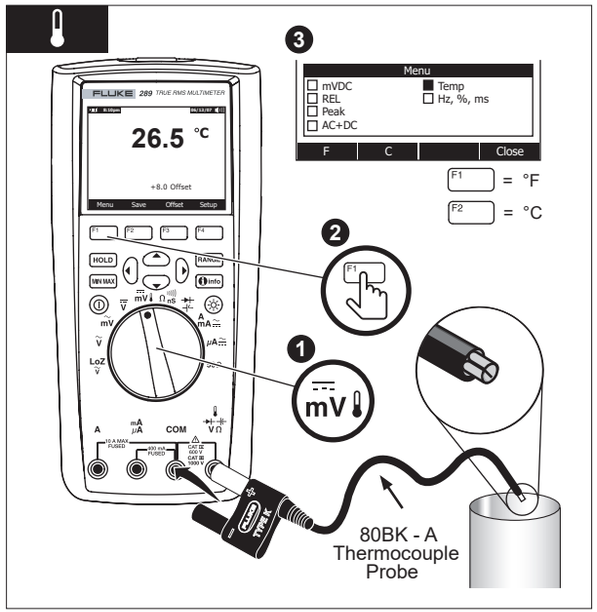

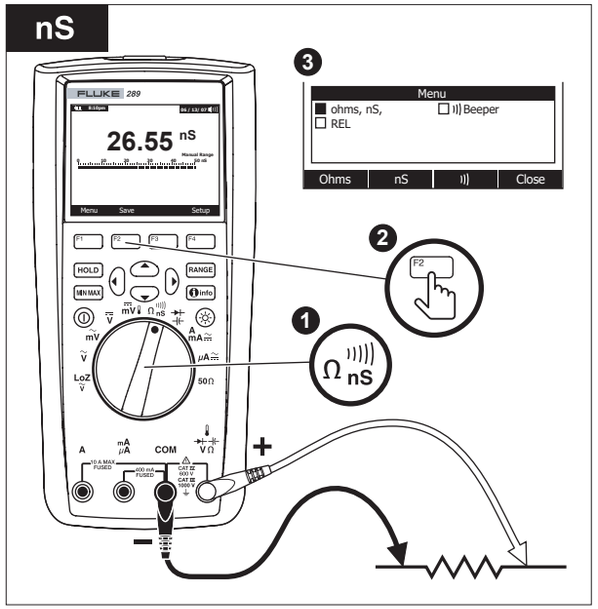

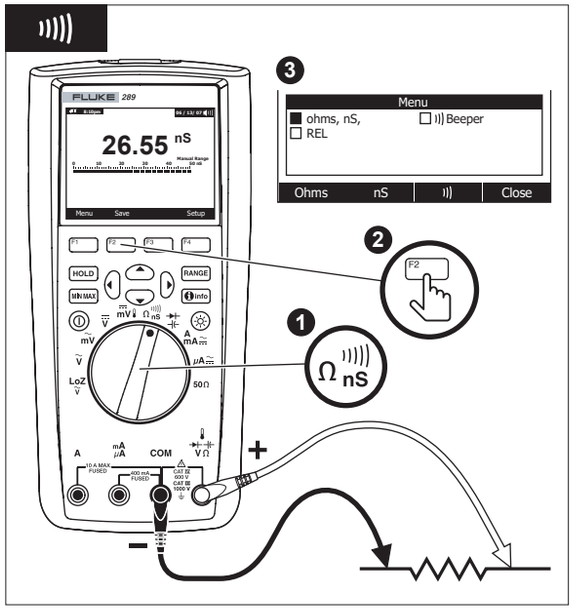

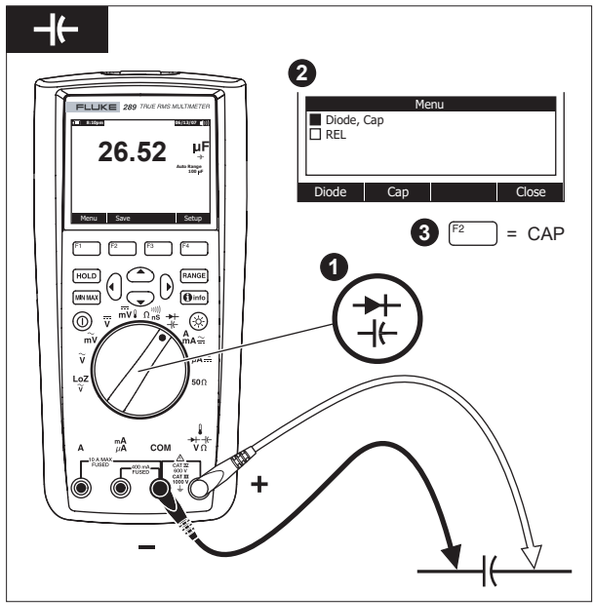

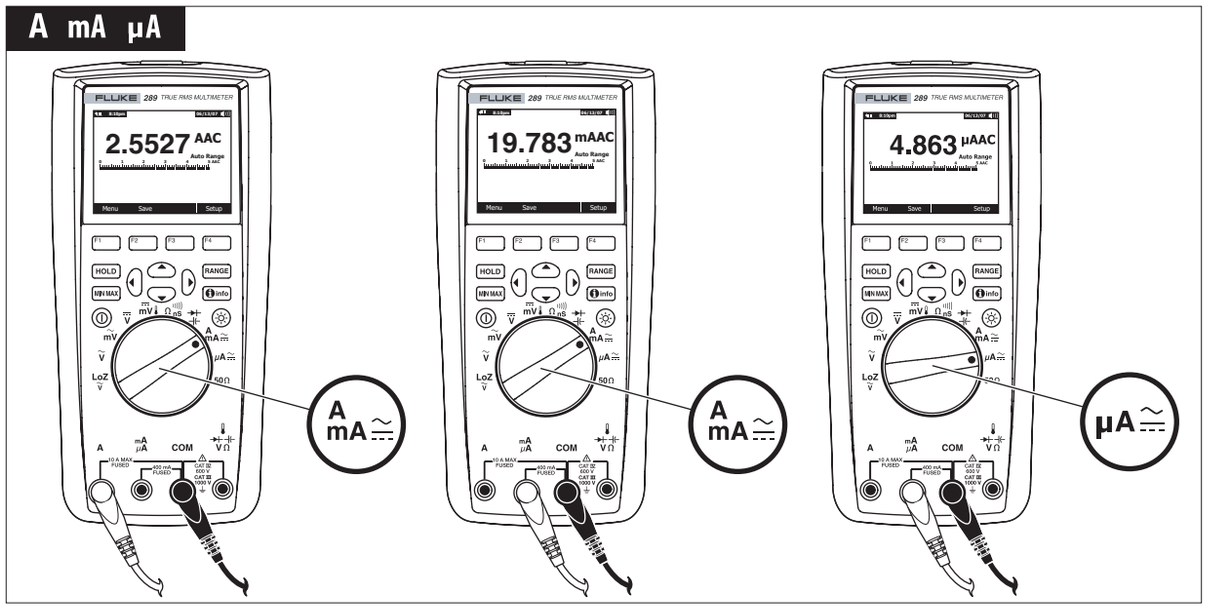

PN 4271794 August 2012, Rev. 1, 7/20
© 2012-2020 Fluke Corporation. All rights reserved. All product names are trademarks of their respective companies.

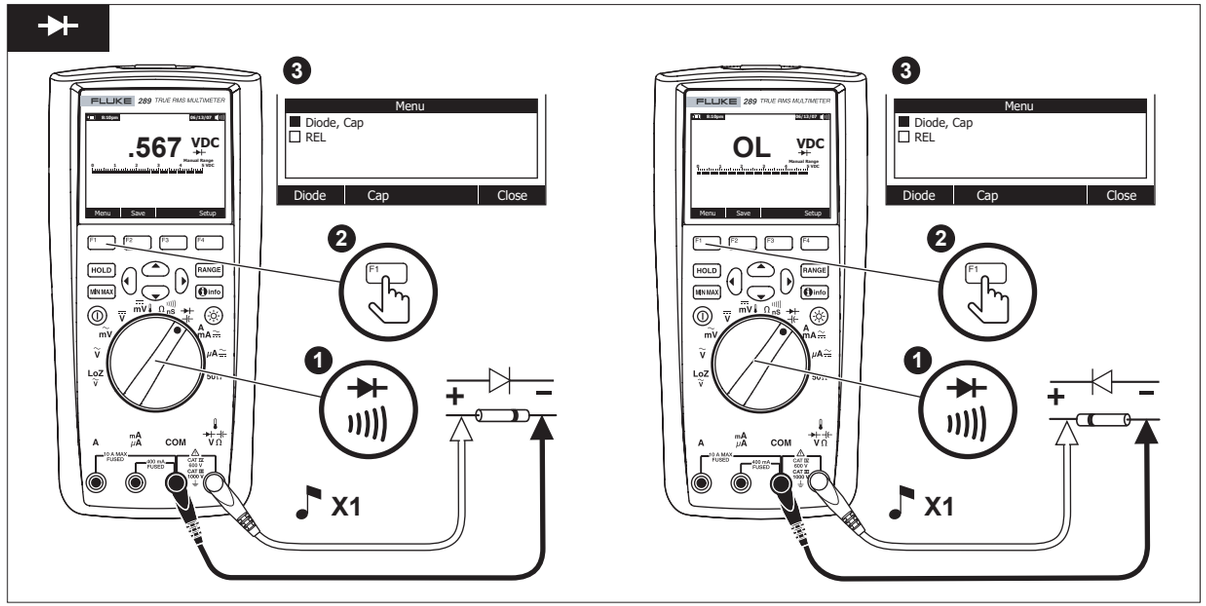
FLUKE 289 TRUE RMS MULTIMETER
.567 VDC
Menu
Diode, Cap
REL
Diode
Cap
Close
OL VDC
X1

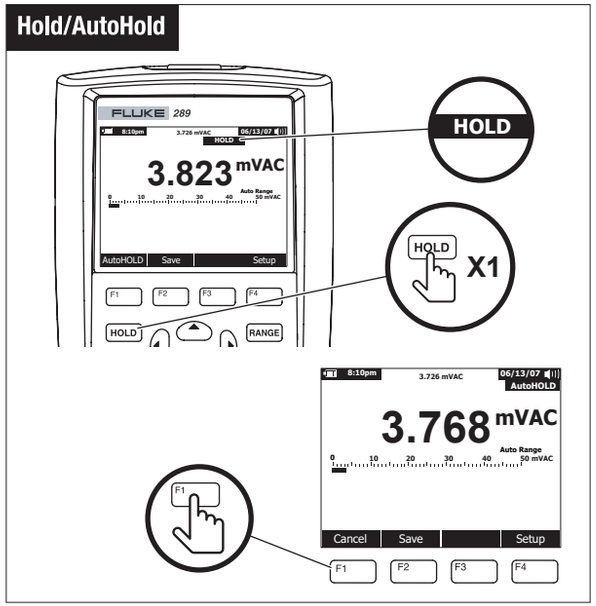
Hold/AutoHold
FLUKE 289
3.823 mVAC
HOLD
X1
3.768 mVAC
AutoHOLD
Cancel
Save
Setup

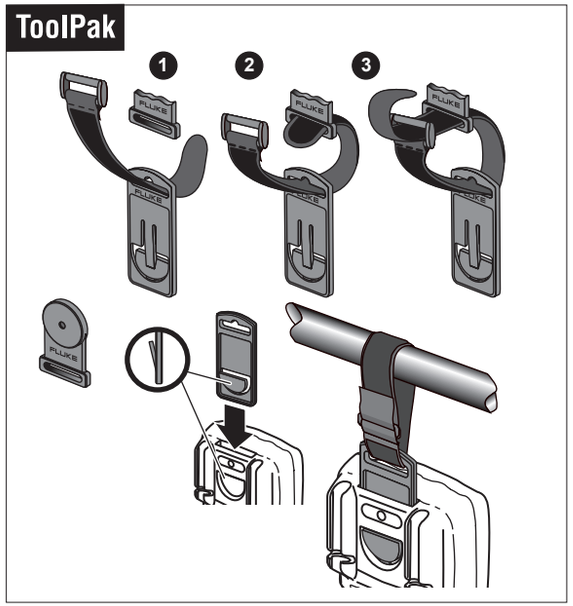
ToolPak

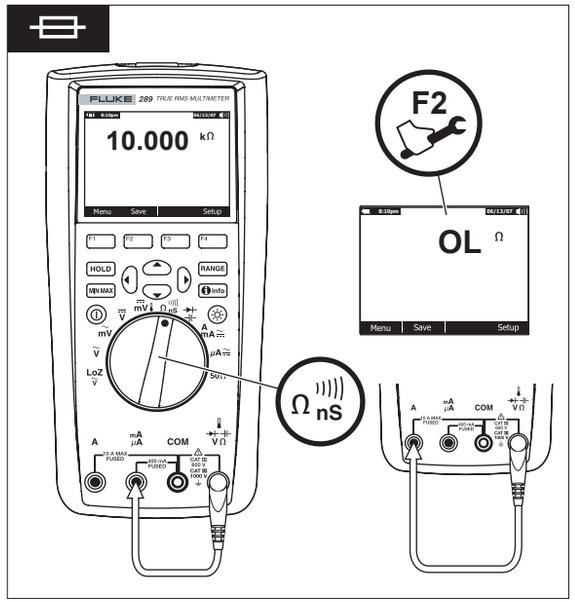
FLUKE 289 TRUE RMS MULTIMETER
10.000 kΩ
F2
OL Ω
Ω nS

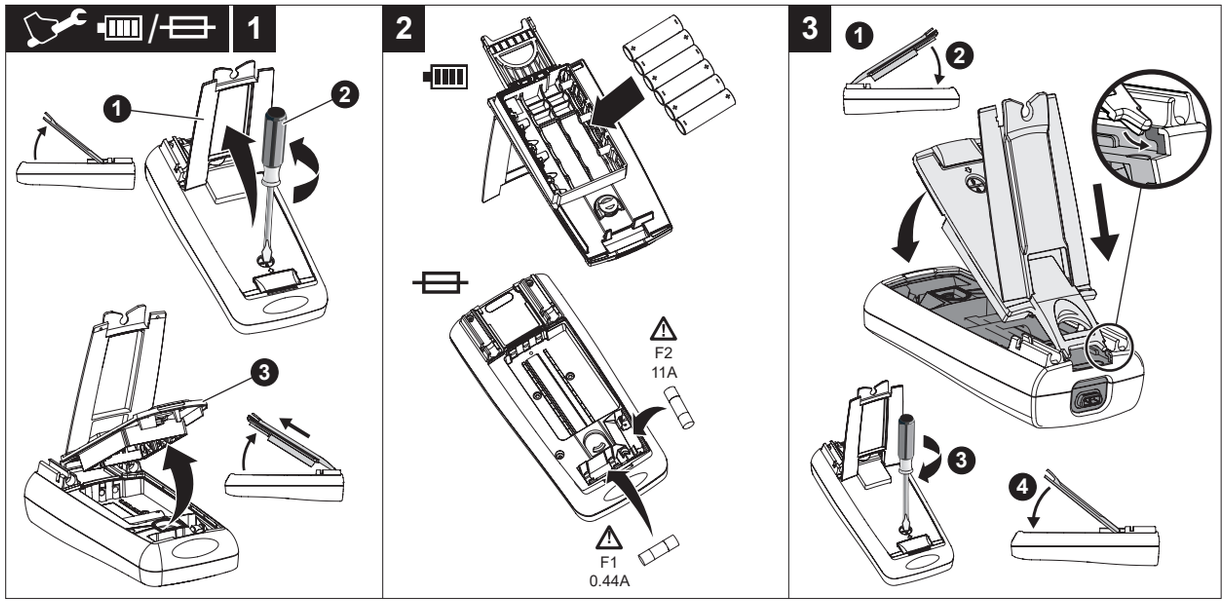
1
2
3
F2
11A
F1
0.44A

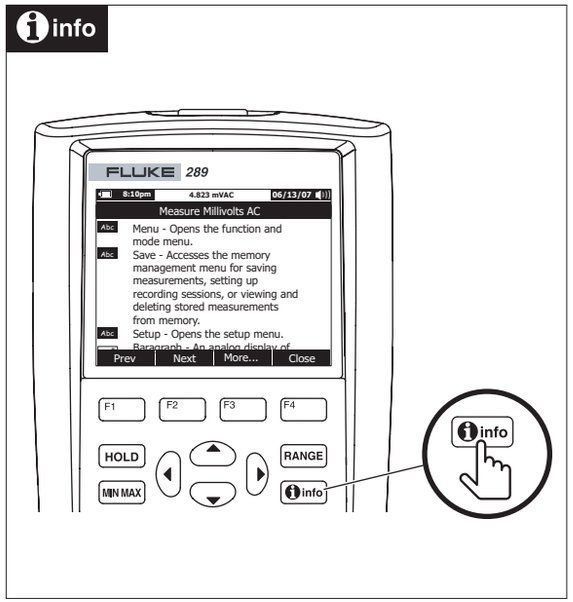
info
FLUKE 289
Measure Millivolts AC
Menu - Opens the function and mode menu.
Save - Accesses the memory management menu for saving measurements, setting up recording sessions, or viewing and deleting stored measurements from memory.
Setup - Opens the setup menu.
Prev
Next
More...
Close